Flush Emax BLHeli ESC with Arduino Uno Using C2 Interface

Step 01

Flash the Arduino Uno using BLHeliSuite 16 Software.

Download: https://github.com/4712/BLHeliSuite/releases

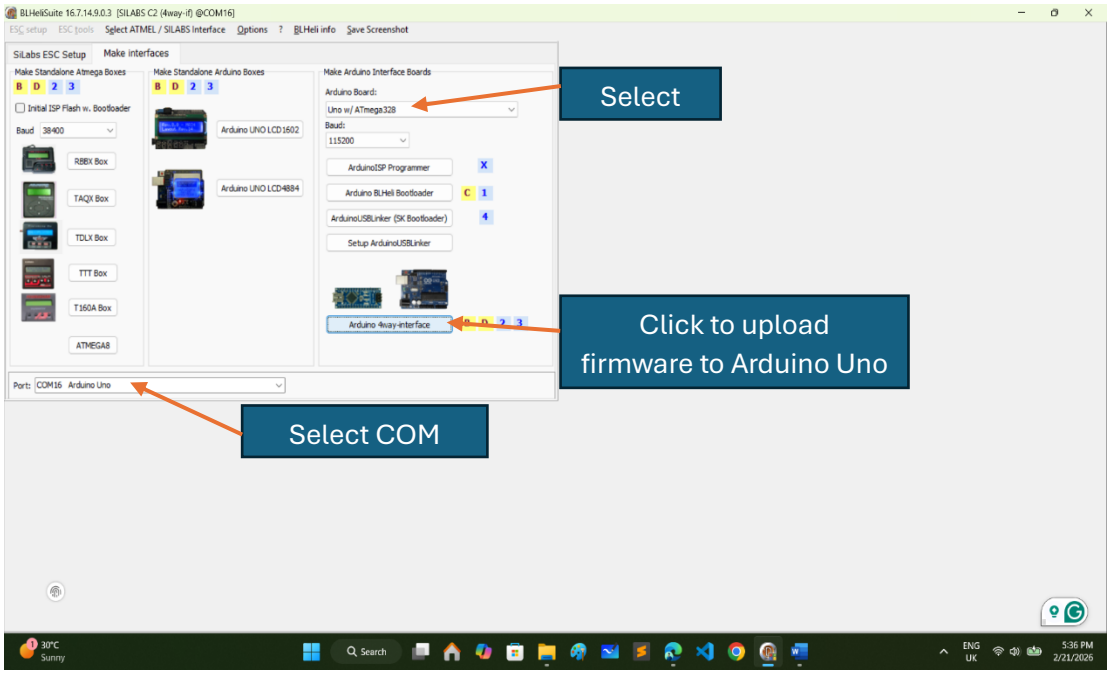

Select this firmware.

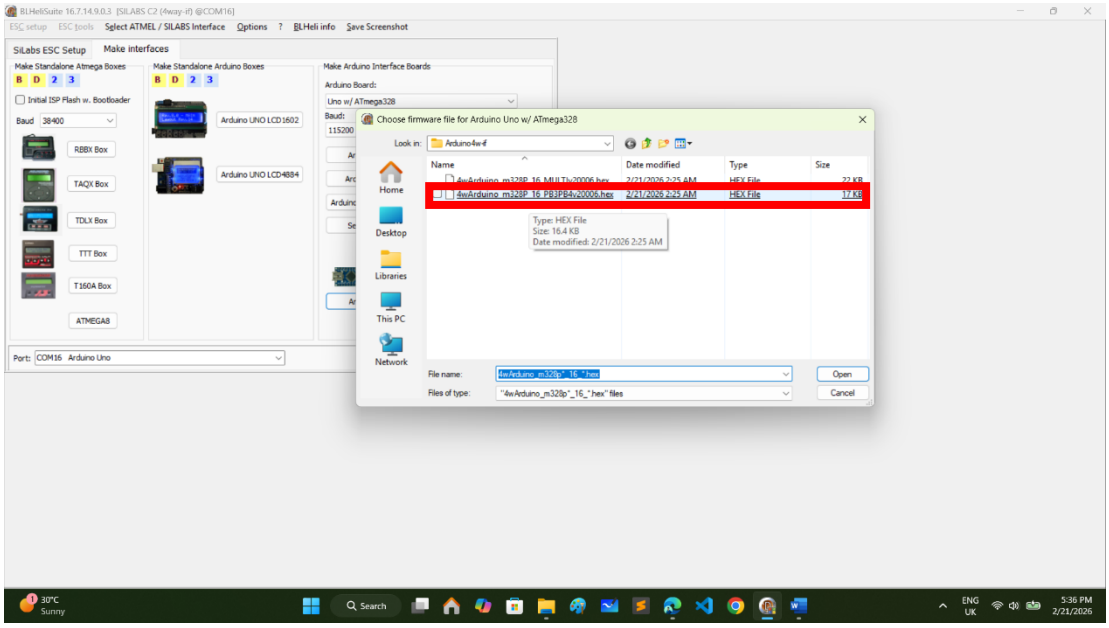

Step 02

Connect the ESC with Arduino Uno as shown below.

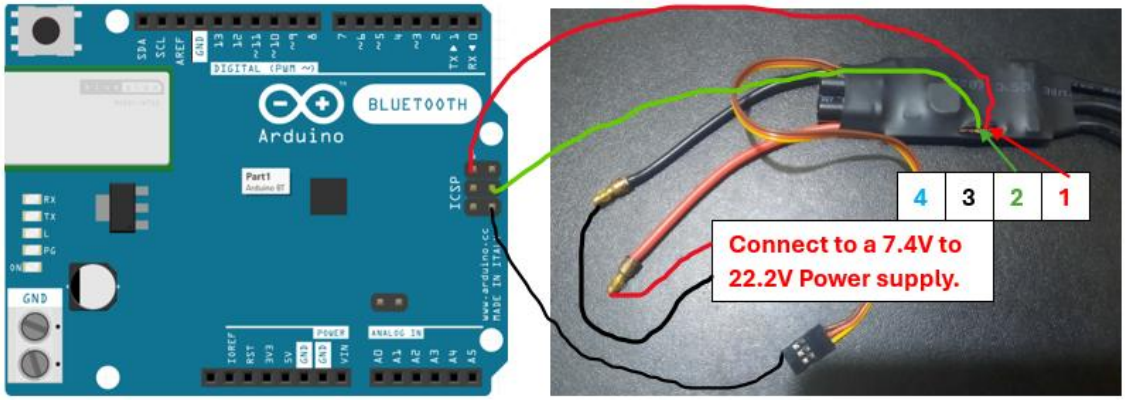

Pinout of Arduino Uno for better understanding.

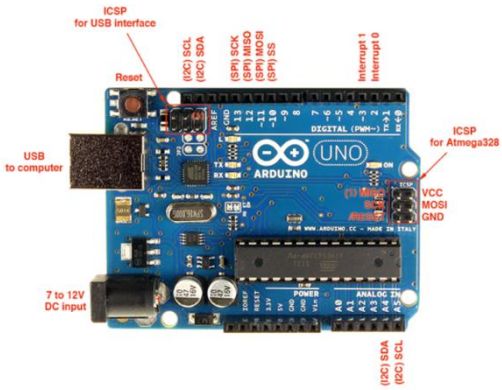

It can be used with Male-Female jumper wire for connection, as shown below.

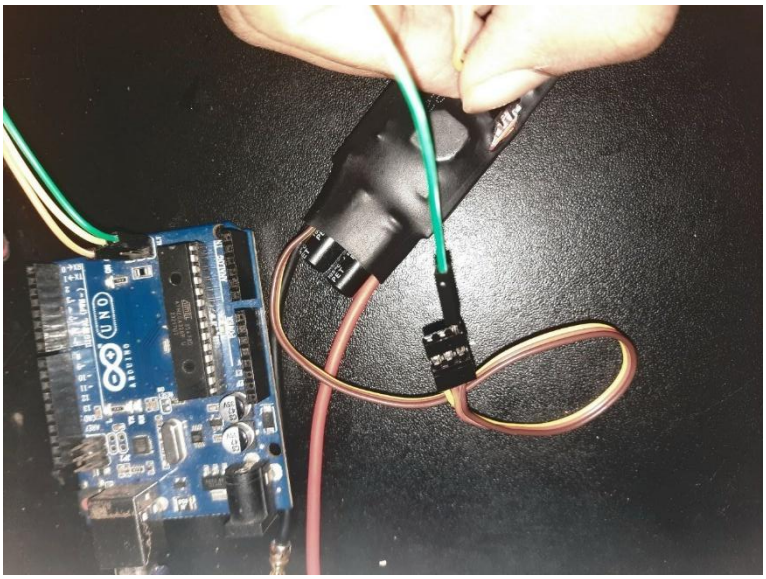

Step 03

Upload firmware to the ESC.

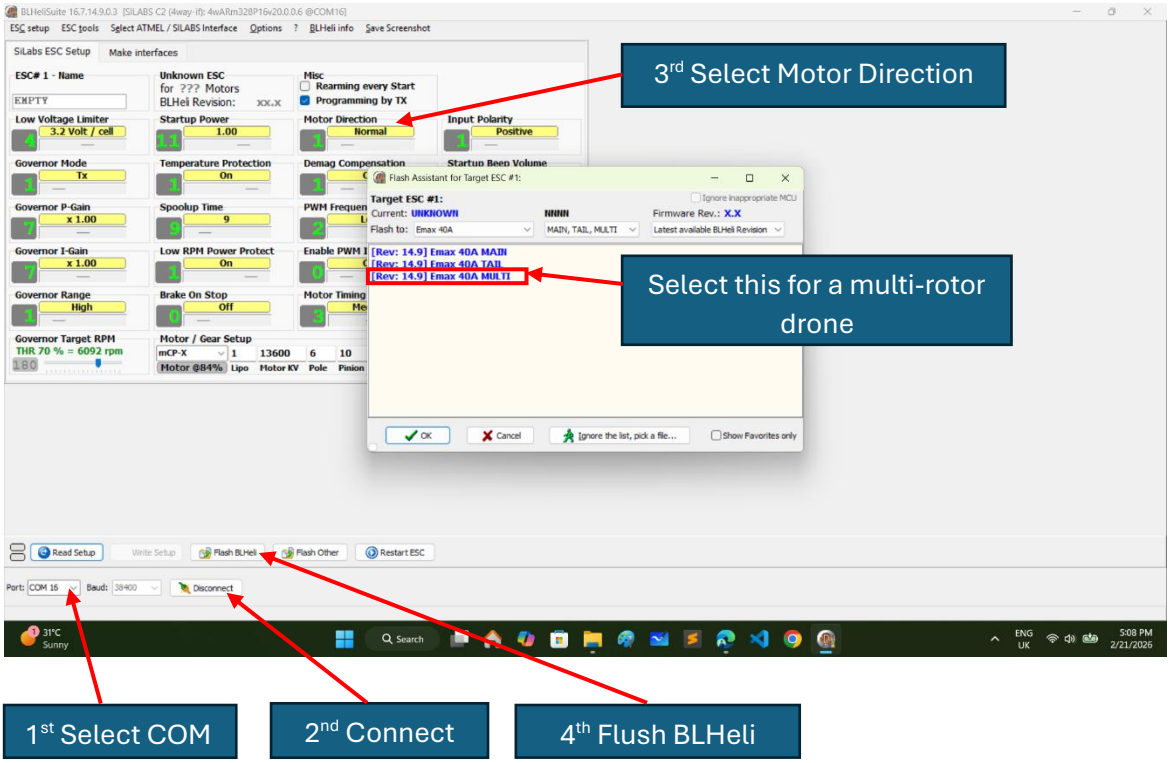

This documentation is made by:

Md. Rashedul Islam

Department of Electrical and Electronic Engineering

Shahjalal University of Science and Technology, Sylhet.

Contract: 01644443828

GitHub: https://github.com/rashed-23